ANT4066 *Quad Analogue Switch for Audio Applications*

Features

- Wide analogue switching range ± 20V
- Low "ON" resistance 20 Ohm typical
- Individual switch control
- Very good linearity
- Pin-compatible with industry-standard 4066 quad switch
- DIL14 footprint
- Low leakage

Absolute Maximum Ratings

Symbol	Parameter	Rating
Vcontrol	Voltage between the control input and the input/output of the switch	±30V
Vin-out	DC voltage between input and output pins	±20V
Iout	DC current, per input/output pin	± 10 mA
T_L	Lead temperature (10 sec soldering)	260 °C
Power dissipation	Per switch	50 mW

Recommended Operating Conditions

Symbol	Parameter	Rating
Von	DC control Voltage relative to the input/output of the switch in "ON" position	+1.5 to +20V
Voff	DC control Voltage relative to the input/output of the switch in "OFF" position	-1.5 to -20V
Iout	Maximum DC current, per input/output pin	± 5 mA
Ta	Operational temperature range	0-70 °C

Attention: Static-sensitive device. Antistatic measures should be observed in handling this device.

Comparative Performance Data:

THD+N measurements

IC type	1kHz 3V RMS 100K load	100kHz 3V RMS 100K load	1kHz 2V RMS 600 Ohm load	100kHz 2V RMS 600 Ohm load	Manufacturer
TC4066P	0.0065%	0.085%	0.27%	0.35%	Toshiba
MC14066BCP	0.0042%	0.092%	0.41%	0.57%	ON Semi
M4066BP	0.0050%	0.078%	0.28%	0.33%	Mitsubishi
74HC4066N	0.0015%	0.050%	0.045%	0.06%	NXP (Philips)
ANT4066	**0.0005%**	**0.006%**	**0.018%**	**0.022%**	**A.N.T. Audio**
Measurment limit	**0.0005%**	**0.006%**	**0.0005%**	**0.006%**	
DC supply +/-5V, Amber 3501 Distortion Meter Rout=300 Ohm; THD+N measured, for 1kHz BW=30 kHz, for 100kHz BW=1MHz					

Typical ON resistance as a function of Input voltage

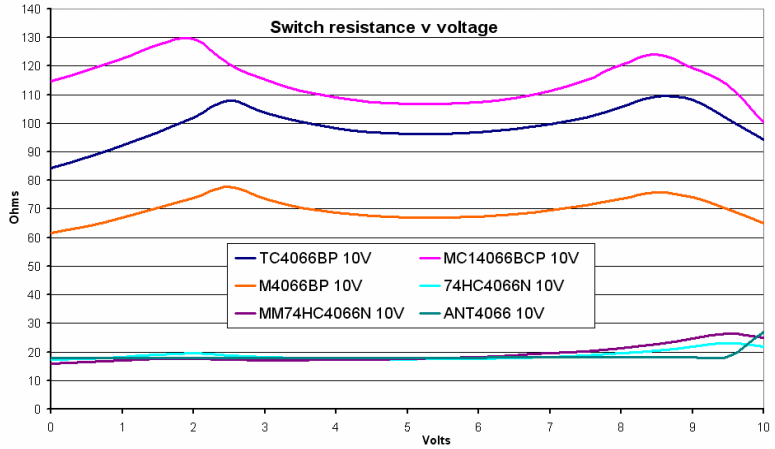

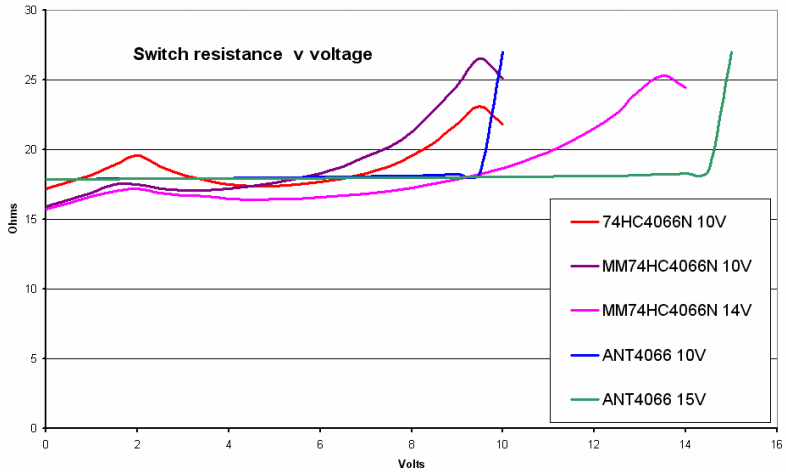

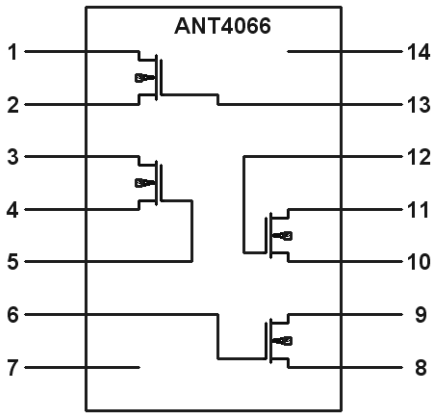

Connection Diagram

Simplified Connection Diagram

shows that ANT4066 contains 4 completely isolated and fully symmetrical FET switches. Pins 7 and 14 are not internally connected. Omitted on the diagram are protection and linearisation components.

Pins description:

Pin 1 - switch A analogue in/out
Pin 2 - switch A analogue in/out
Pin 3 - switch B analogue in/out
Pin 4 - switch B analogue in/out
Pin 5 - switch B control input
Pin 6 - switch C control input
Pin 7 - not connected
Pin 8 - switch C analogue in/out
Pin 9 - switch C analogue in/out
Pin 10 - switch D analogue in/out
Pin 11 - switch D analogue in/out
Pin 12 - switch D control input
Pin 13 - switch A control input
Pin 14 - not connected

Maximum DC voltage between individual switches should not be more than ± 50V

Application Notes:

ANT4066 can replace a standard 4066 CMOS switch used for analogue switching with the analogue input-output voltages at least 1.5V above the "OFF" control voltage and at least 1.5V below the "ON" control voltage. In most cases when 4066 is used in audio applications these conditions are satisfied.

FET switches in ANT4066 are normally "ON" (depletion mode) devices and need about +1V on the control input for the switch to be completely "ON" and about -1V for the switch to be completely "OFF" . The linearisation and protection circuit (not shown on the connection diagram) provides useful in audio applications smooth transitions with about 1-2 ms operation time from "OFF" to "ON" and 0.2-0.3 ms from "ON" to "OFF" .

ANT4066 provides low leakage currents: at 25°C in the "OFF" state these are below 10 nA from the input to the output or from the control line to the input/output terminals, and in the "ON" state leakage currents between the control input and the input/output terminals are below 30nA. Selected for low leakage (below 5nA "OFF" and 15nA "ON" at 25°C) version ANT4066Q is also available. Leakages between individual switches are well below 1nA .

Capacitive coupling between the analogue in/out pins for a switch in the "OFF" position is below 10 pF and between the control input and in/out pins is below 5 pF. Typical resistance of the switch in the "ON" position is 17-20 Ohm and in the "OFF" position is above 1Gohm .

Order numbers:

ANT4066A - first hardware revision

ANT4066Q - low leakage selection for Quad preamplifiers, sold exclusively by
Timestep Distribution

Revision 1.1 ©2009 A.N.T. Audio